structo WALL SYSTEMS

A SPATIAL WAY OF THINKING — QUALITY DESIGN FROM ESTONIA — structo

GLASS DOOR WITH ALUMINUM DOOR FRAME AND OVERLIGHT WITHOUT VERTICAL PROFILES

FITS PERFECTLY WITH A FULL GLASS WALL

DECOR PROFILES CAN CREATE CONTRASTING LOOKS

# PORTA– 53GF

| | |
|---|---|
| Maximum external dimensions of the product (width x height): | 990 x 3000 mm |
| Maximum external dimensions of the door frame (width x height):<br>* with ALUSLIM-12 door panel | 990 x 2650 mm* |
| Door panel glass thicknesses:<br>* see Technical Description for detailed information | 6 - 10,76 mm* |
| Soundproofing:<br>* with ALUSLIM-12 door panel and 55.2SR glass | Rw = 38 dB* |

+372 666 5017 | info@structo.ee | www.structo.ee

# PORTA–53GF | TECHNICAL DESCRIPTION

PORTA-53GF is a portal system made with aluminum profiles which can be completed with different door panels and glasses.

The symbol "GF" in the product name means a door frame with overlight and a glass door panel. The glass of the overlight is connected to the adjacent glass using glass tape.

The portal can be completed with 4 different door panels (single or pair doors):

- The ALUSLIM-12 door panel has only a 12mm thick aluminum frame in which it is possible to use glass or other material with a thickness of 8 - 10.76 mm. Standard max opening angle of the door panel is 165°, but in case of electric locking it's reduced to 120°.

- GD-12 door panel is a full glass door without frame on 3 sides and with a profile only on the hinge side. The thickness of the glass of the door panel can be 8 - 8.76 mm.

- The third option is a full glass door without frame. The thickness of suitable glasses is 8-10.76mm.

- The fourth option is S-32 door leaf with 40x64 vertical aluminum profiles in which it is possible to use glass or other material with a thickness of 6 - 8.76 mm.

Possible types of glass are tempered, laminated or tempered-laminated.

The surface of the glass can be bright, very bright, mass-tinted, background-painted or matte.

Aluminum decor profiles can be installed on the glass, which can give the door panel an exciting look.

The standard surface finish of aluminum profiles is natural (silver) anodizing but it is also possible to order a painted surface according to the RAL colour catalogue.

The standard fittings are:

- For ALUSLIM-12 door panel, ASSA 565 lock case (Valnes E114 for EURO cylinder) and STRUCTO PIVOT hidden hinges.
In case of electric locking standard fittings are lock case EL502, cable EA210 and lead cover EA280.

- For GD-12 door panel, STRUCTO PIVOT hidden hinges and COLCOM 683W02 lock case.

- For a full glass door panel, SH-S59-1 Silver hinges and COLCOM 683W02 lock case.

- For a S-32 door panel, Abloy 3248 hinges and Abloy LC305-30 lock case.

It's possible to use other fittings, but please contact our sales team about compatibility.

The range of thresholds includes an aluminum profile threshold with a silicone seal or a descending seal.

Openable side section ELZONE-92A can be installed on one or both sides of PORTA-53GF, which is ideal for connectors, switches, cabling, etc. Minimum width of the side section when installing electrical accessories is 140mm. More information about side sections under the product "ELZONE-92A".

Soundproofing measured in laboratory (Rw) with ALUSLIM-12 door panel:

| |
|---|
| Rw = 31 dB<br>(with 8mm glass and aluminum threshold) |
| Rw = 33 dB<br>(with 10mm glass and aluminum threshold) |
| Rw = 38 dB<br>(with 55.2SR glass and aluminum threshold) |
| Rw = 38 dB<br>(with 55.2SR glass and descending threshold) |

| | |
|---|---|
| Maximum external dimensions of the product (width x height): | 990 x 3000 mm |

Maximum external dimensions of the door frame (width x height):

| | |
|---|---|
| With ALUSLIM- 12 door panel | 990 x 2650 mm |
| With GD- 12 door panel<br>* With 8 - 8,76mm glasses. | 990 x 2400 mm |
| With full glass door panel | 990 x 2400 mm |
| With S-32 door panel | 1000 x 2400 mm |

+372 666 5017 | info@structo.ee | www.structo.ee

# PORTA – 53GF

WITH INWARDS OPENING
ALUSLIM-12 DOOR PANEL

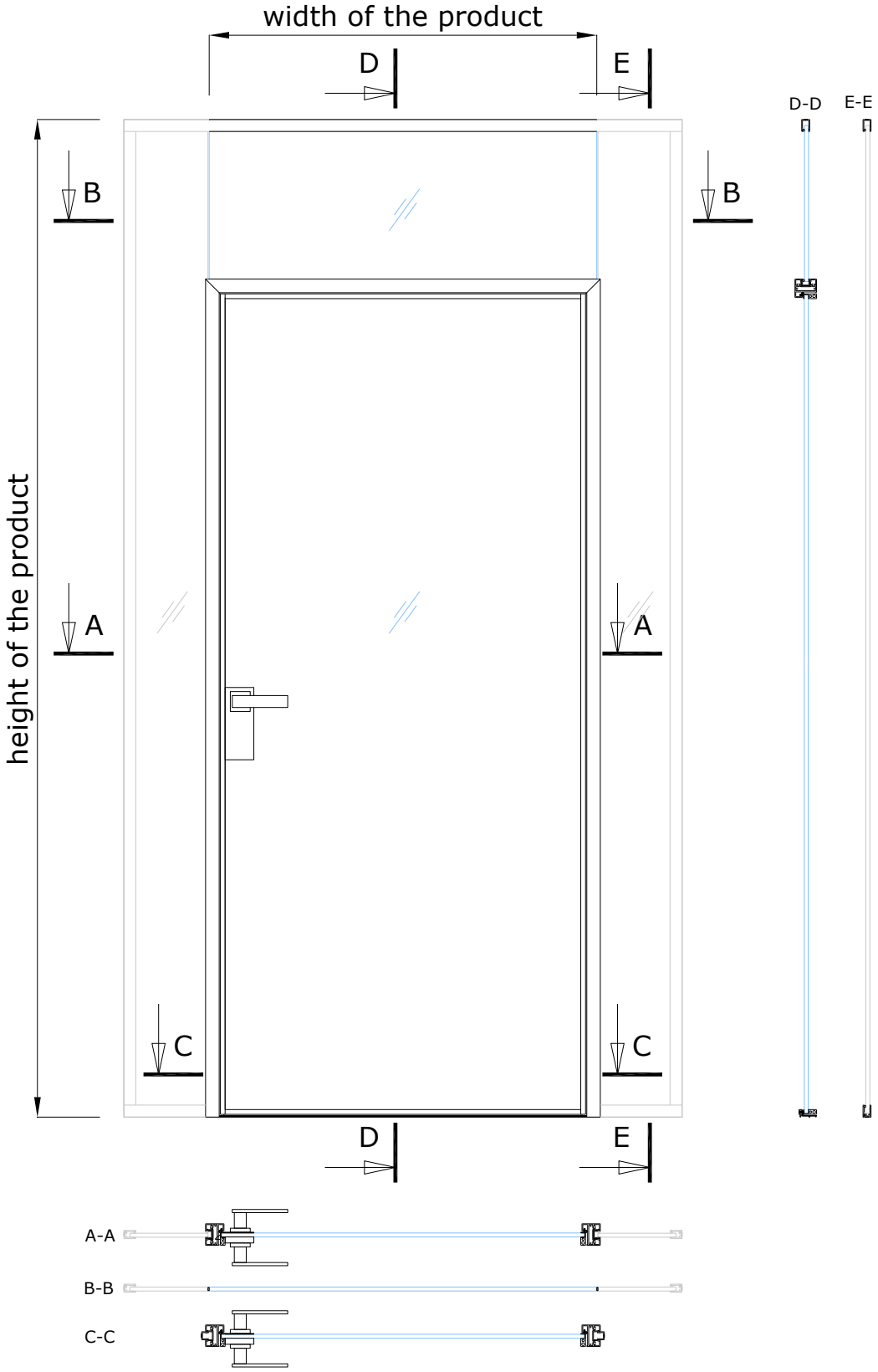


+372 666 5017
info@structo.ee
www.structo.ee

# PORTA – 53GF | CONNECTION UNITS OF ALUSLIM-12 DOOR PANEL

A SPATIAL WAY OF THINKING — QUALITY DESIGN FROM ESTONIA — structo

## CONNECTION WITH CEILING

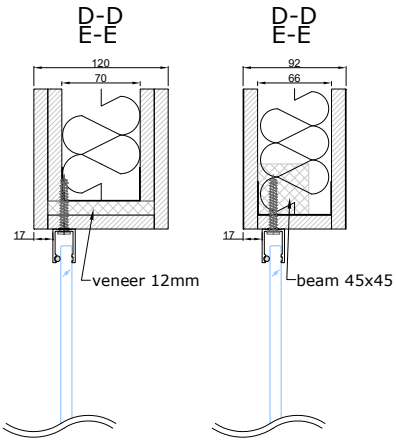


## CONNECTION WITH SIDE GLASS

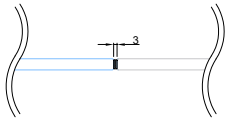


## CONNECTION WITH WALL

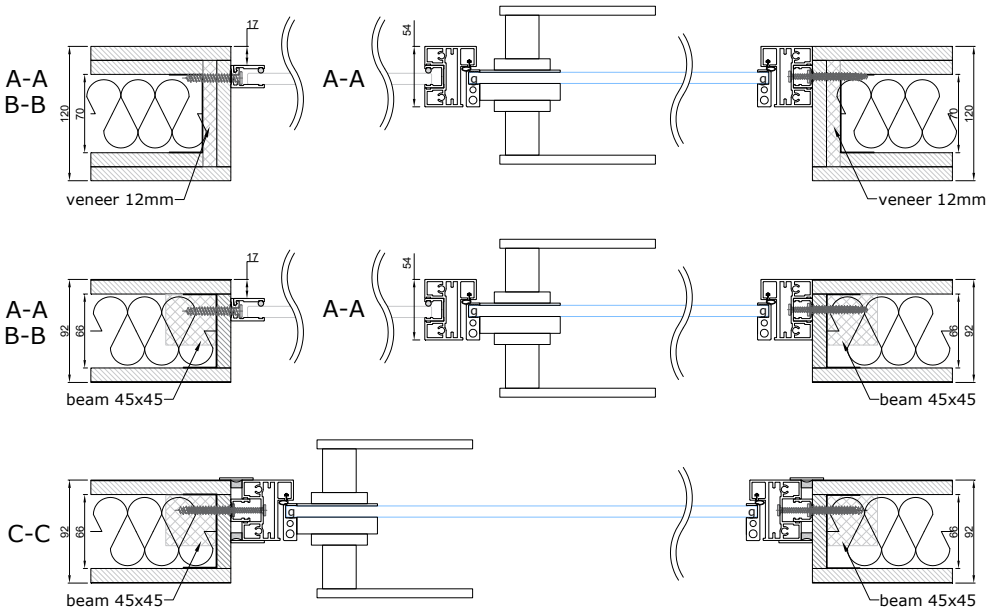


## CONNECTION WITH WALL WITHOUT SIDELIGHT




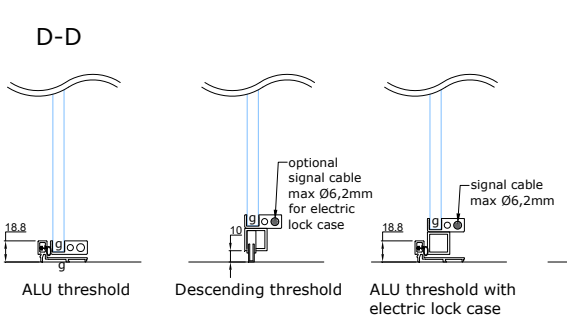


- ○ - seal, EPDM-50Dha_5mm_ BLACK
- g - glued connection
- ⚲ - seal, VS118/8 black, white, dark gray
- | - seal, FIX-SEAL/S 3x10mm, black
- ▭ - mastic sealant (optional when better soundproofing is required)
- ▮ - AFTC double-sided tape, 2,5x5mm / 3x7mm / 3x10mm, colourless


+372 666 5017 | info@structo.ee | www.structo.ee

# PORTA – 53GF

WITH INWARDS OPENING
GD-12 DOOR PANEL

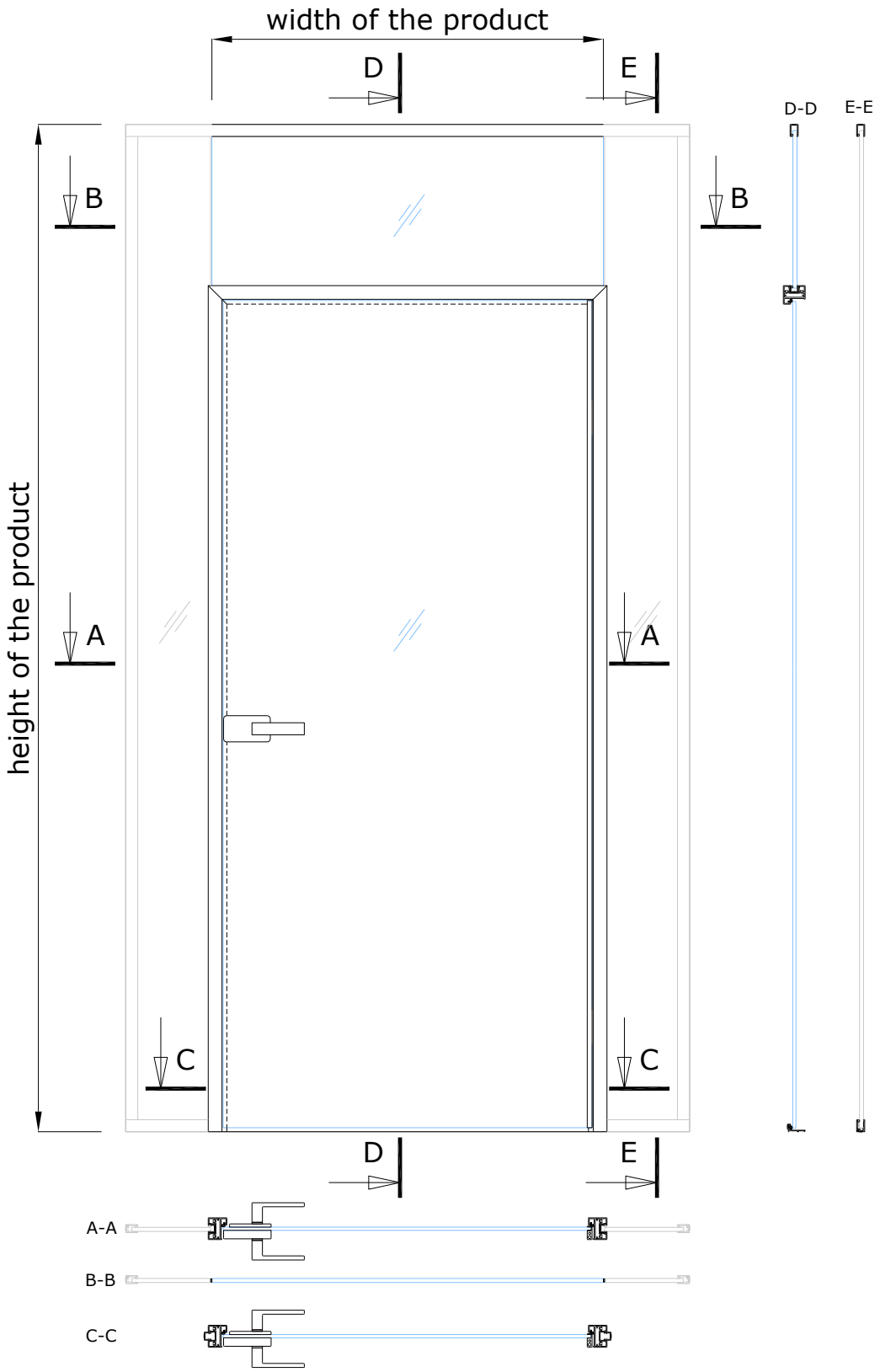


+372 666 5017
info@structo.ee
www.structo.ee

# PORTA – 53GF | CONNECTION UNITS OF GD-12 DOOR PANEL

A SPATIAL WAY OF THINKING — QUALITY DESIGN FROM ESTONIA — structo

## CONNECTION WITH CEILING

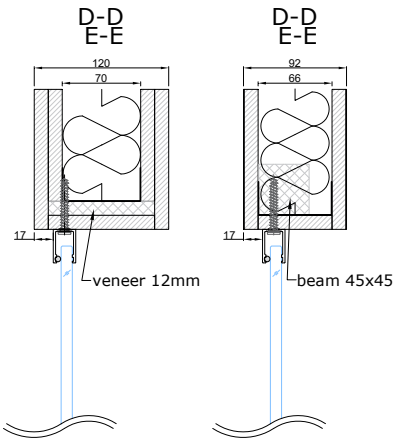


## CONNECTION WITH SIDE GLASS

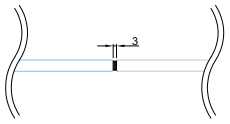


## CONNECTION WITH WALL

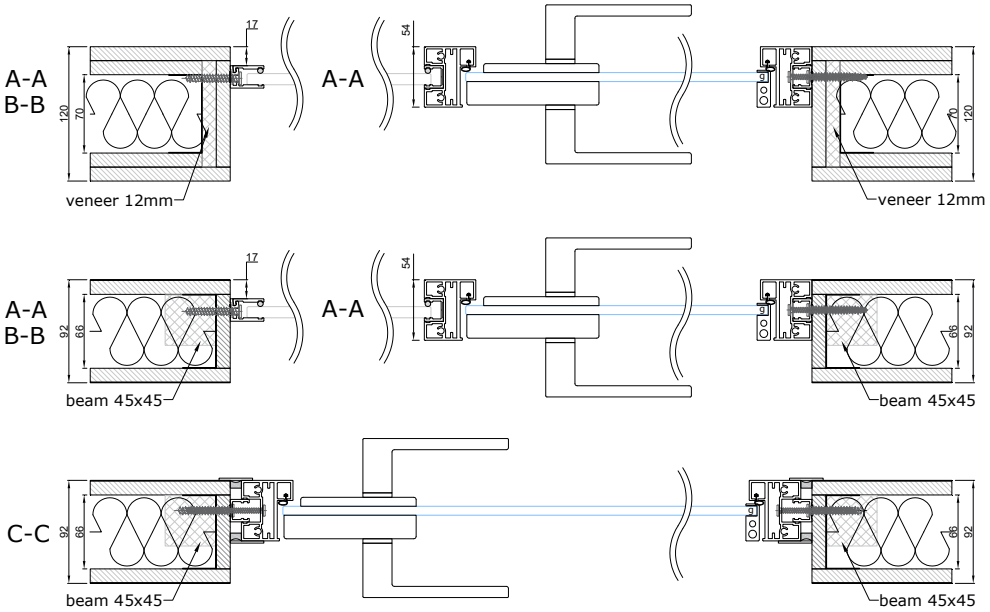


## CONNECTION WITH WALL WITHOUT SIDELIGHT

## CONNECTION WITH FLOOR

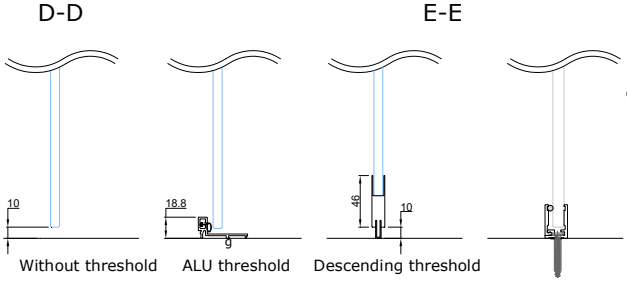


- ○ - seal, EPDM-50Dha_5mm_BLACK
- g - glued connection
- ⚲ - seal, VS118/8 black, white, dark gray
- | - seal, FIX-SEAL/S 3x10mm, black
- ▱ - mastic sealant (optional when better soundproofing is required)
- ▮ - AFTC double-sided tape, 2,5x5mm / 3x7mm / 3x10mm, colourless


+372 666 5017 | info@structo.ee | www.structo.ee

# PORTA – 53GF

WITH INWARDS OPENING
FULL GLASS DOOR PANEL

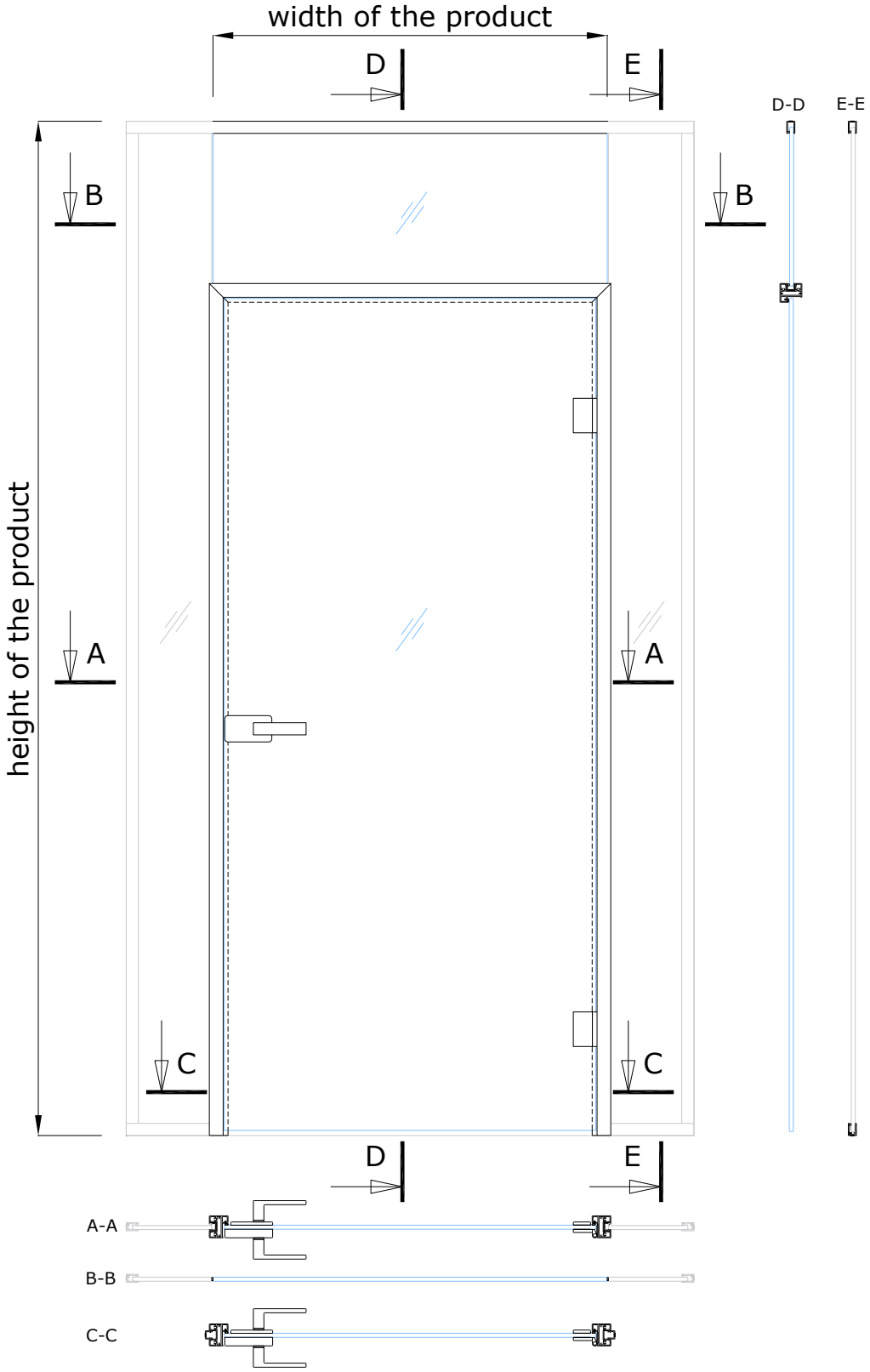


+372 666 5017
info@structo.ee
www.structo.ee

# PORTA – 53GF

## CONNECTION UNITS OF FULL GLASS DOOR PANEL

A SPATIAL WAY OF THINKING — QUALITY DESIGN FROM ESTONIA — structo

### CONNECTION WITH CEILING

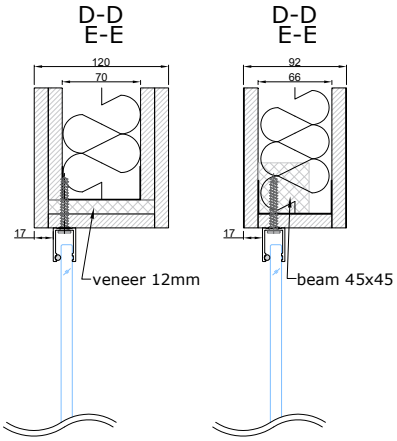


### CONNECTION WITH SIDE GLASS

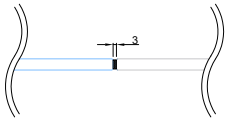


### CONNECTION WITH WALL

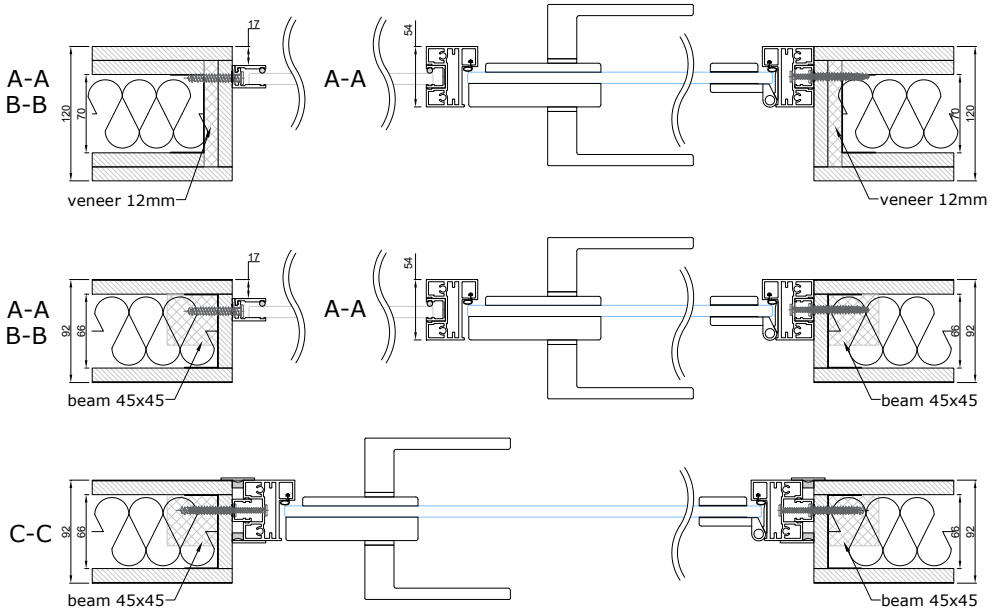


### CONNECTION WITH WALL WITHOUT SIDELIGHT

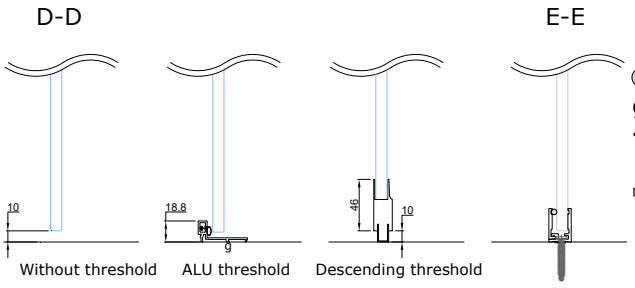


- ○ - seal, EPDM-50Dha_5mm_BLACK
- g - glued connection
- ⌇ - seal, VS118/8 black, white, dark gray
- | - seal, FIX-SEAL/S 3x10mm, black
- ▱ - mastic sealant (optional when better soundproofing is required)
- ▮ - AFTC double-sided tape, 2,5x5mm / 3x7mm / 3x10mm, colourless


+372 666 5017 | info@structo.ee | www.structo.ee

# PORTA – 53GF

WITH INWARDS OPENING
S-32 DOOR PANEL

A SPATIAL WAY OF THINKING — QUALITY DESIGN FROM ESTONIA — structo

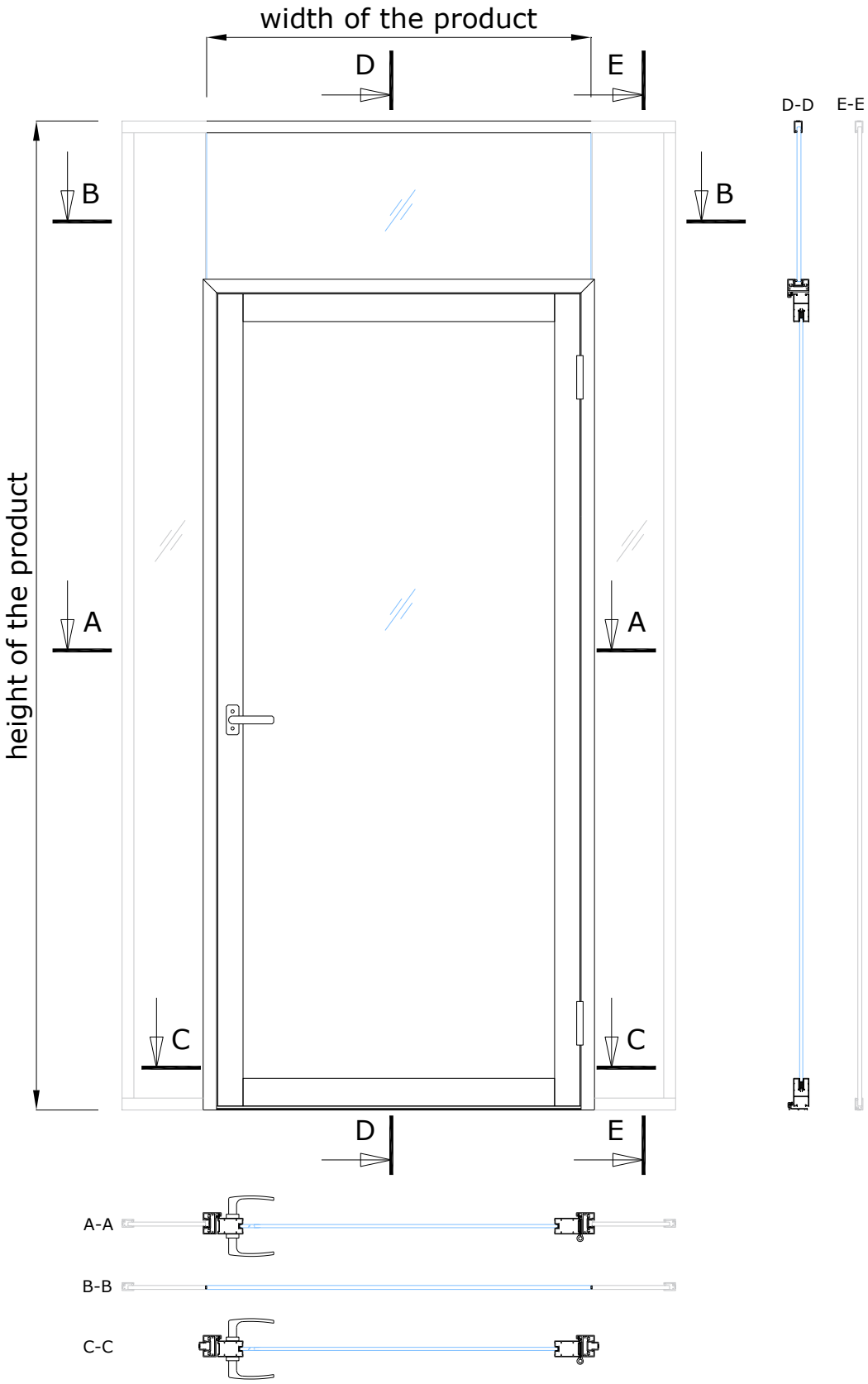


+372 666 5017
info@structo.ee
www.structo.ee

# PORTA–53GF | CONNECTION UNITS OF S-32 DOOR PANEL

A SPATIAL WAY OF THINKING — QUALITY DESIGN FROM ESTONIA — structo

## CONNECTION WITH CEILING

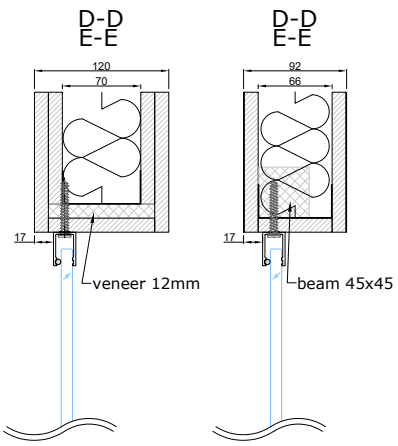


## CONNECTION WITH FLOOR

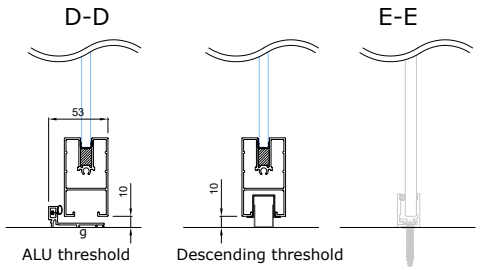


- seal, EPDM-50Dha_5mm_BLACK
- g - glued connection
- seal, VS118/8 black, white, dark gray
- seal, FIX-SEAL/S 3x10mm, black
- mastic sealant (optional when better soundproofing is required)
- seal, LU6, transparent

## CONNECTION WITH WALL

## CONNECTION WITH WALL WITHOUT SIDE OVERLIGHT

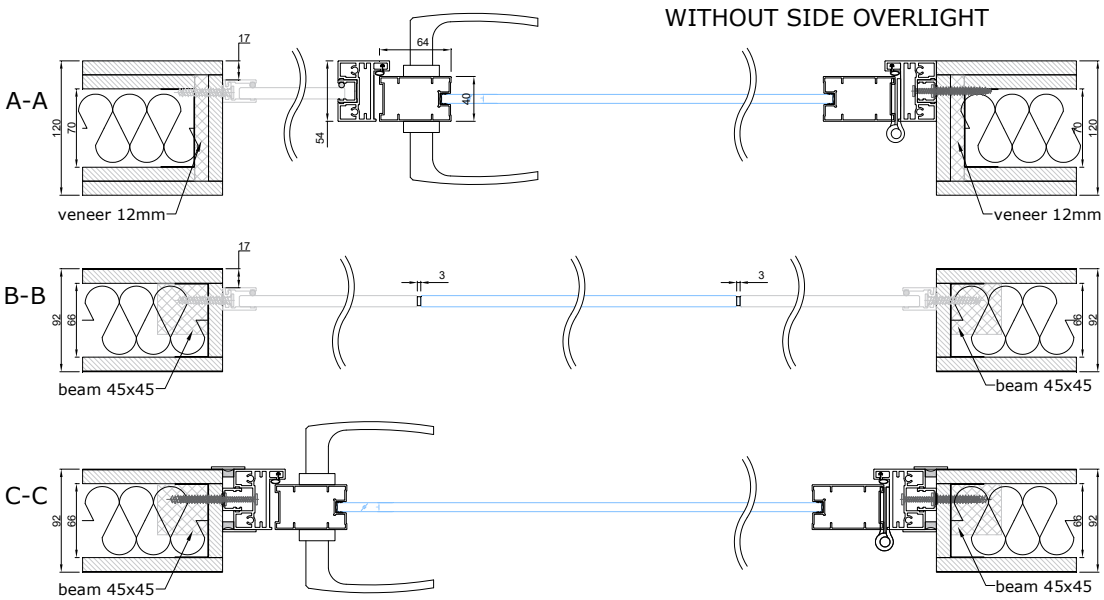


## PAIR DOOR CONNECTION WITH WALL WITHOUT SIDELIGHT

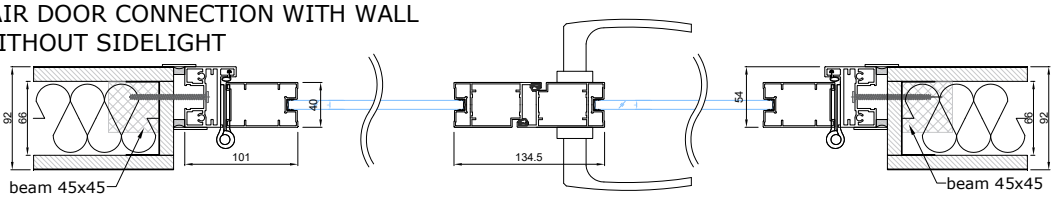



+372 666 5017 | info@structo.ee | www.structo.ee